Prime Consulting Engineers Pty. Ltd.

Design Report:

14m, 12m, 10m, 8m, 6m & 4m

High Pressure Inflatable Arches

For

40km/hr Wind speed

For

Ref: R-23-581-1

Date: 21/07/2023

Amendment: -

Prepared by: AK

Checked by: KZ

Email: info@primeengineers.com.au
Web: www.primeengineers.com.au
Address: Level M/394 Lane Cove Rd, Macquarie Park
Phone: (02) 8964 1818

CONTENTS

1 Introduction and Scope: 3
1.1 Project Description 3
1.2 References 3
1.3 Notation 4
2 Design Overview 4
2.1 Geometry Data 4
2.2 Assumptions & Limitations 5
2.3 Exclusions 5
2.4 Design Parameters and Inputs 5
2.4.1 Load Cases 5
2.4.2 Load Combinations 5
3 Wind Analysis 6
3.1 Wind calculations 6
3.2 Wind Load Diagrams 8
3.2.1 Wind Load (W1) 8
3.2.2 Wind Load (W2) 9
4 Analysis 10
4.1 Results 10
4.1.1 Maximum Axial Force 10
4.1.2 Maximum Reactions 11
5 Ballast Requirements 12
6 Summary and Recommendations 13
7 Appendix A - Technical Data 14

1 Introduction and Scope:

The report and certification are the sole property of Prime Consulting Engineers Pty. Ltd.

Prime Consulting Engineers have been engaged by Extreme Marquees Pty. Ltd. to carry out a structural analysis of 14m, 12m, 10m, 8m, 6m & 4m High Pressure Inflatable Arches For 40km/hr Wind speed to determine holding down weight requirements. It should be noted that the outcome of our analysis is limited to the selected items as outlined in this report.

This report shall be read in conjunction with the documents listed in the references (Cl. 1.2)

1.1 Project Description

The report examines the effect of the peak gust wind that an equivalent moving average time of approximately 0.2s of **11.11m/s (40 km/hr)** positioned for the worst effect on 14m, 12m and 10m inflatable arche structures. The relevant Australian Standards AS1170.0:2002 General principles, AS1170.1:2002 Permanent, imposed, and other actions and AS1170.2:2021 Wind actions are used.

1.2 References

- The documents referred to in this report are as follows:
  - Report on results produced through SAP2000 V24 software.
- The basic standards used in this report are as follows:
  - AS 1170.0:2002 – Structural Design Actions (Part 0: General principles)
  - AS 1170.1:2002 – Structural Design Actions (Part 1: Permanent, imposed, and other actions)
  - AS 1170.2:2021 – Structural Design Actions (Part 2: Wind Actions)
- Section Details of PVC members provided by the client.
- The program(s) used for this analysis are as follows:
  - SAP2000 V24

1.3 Notation

AS/NZS	Australian Standard/New Zealand Standard
FEM/FEA	Finite Element Method/Finite Element Analysis
SLS	Serviceability Limit State
ULS	Ultimate Limit State

2 Design Overview

2.1 Geometry Data

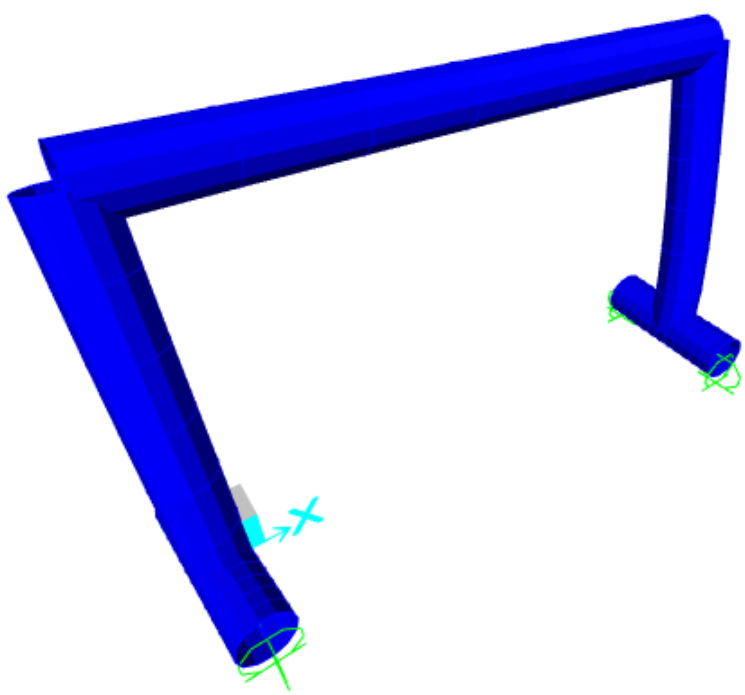

Figure 1 Isometric view of structures

2.2 Assumptions & Limitations

- The structure is for temporary use only.
- For high gust wind speed anticipated at the site of the structure, the inflated structure is to be deflated.
- For forecast winds more than **40km/hr,** the structure is to be completely deflated.
- The structure is design for wind parameters as below:
  - Wind Region A
  - TC2
  - M_s, M_t & M_d = 1
- Shall the site conditions/wind parameters exceed prescribed design wind actions (refer to Cl.4), Prime Consulting Engineers Pty. Ltd. should be informed to determine appropriate wind classifications and amend computations accordingly.

2.3 Exclusions

- Design of PVC members.
- Wind actions due to tropical or severe tropical cyclonic areas.
- Snow and ice loads.
- Footing design.

2.4 Design Parameters and Inputs

2.4.1 Load Cases

1.	G	Permanent actions (Dead load)
2.	W	Wind action.

2.4.2 Load Combinations

Strength:

1.	1.35G	Permanent action only.
2.	0.9G+W	Permanent and wind actions.
3.	1.2G+W	Permanent and wind actions.

Serviceability:

1. G+W Wind service actions

3 Wind Analysis

3.1 Wind calculations

PRIME CONSULTING ENGINEERS PTY. LTD

Project: *Extreme Marquees*

Jon no. *23-581* *Designer:* *AK*

Date: *21/07/2023* *Amendment:* *0*

Name	*Symbol*	*Value*	*Unit*	*Notes*	*Ref.*
		General			
Importance level		1			*Table 3.1 - Table 3.2 (AS1170.0)*
Annual probability of exceedance					*Table 3.3*
Regional gust wind speed		**40.00**	Km/hr		
Regional gust wind speed	V_R	11.11	m/s		
Wind Direction Multipliers	M_d	1			*Table 3.2 (AS1170.2)*
Terrain Category	TC	2			
Terrain Category Multiplier	$M_{Z,Cat}$	0.91			
Shield Multiplier	M_S	1			*4.3 (AS1170.2)*
Topographic Multiplier	M_t	1			*4.4 (AS1170.2)*
Site Wind Speed	$V_{Site,\beta}$	**10.11**	m/s	$V_{Site,\beta}=V_R*M_d*M_{z,cat}*M_S,M_t$	
		Wind Pressure			
ρair	ρ	1.2	Kg/m^3		
dynamic response factor	C_{dyn}	1			
Wind Pressure	$\rho*C_{fig}$	**0.061**	Kg/m^2	$\rho=0.5\rho_{air}*(V_{des,\beta})^2*C_{fig}*C_{dyn}$	*2.4 (AS1170.2)*
		Posts			
		WIND DIRECTION 1 (Perpendicular to B)			

Width	B	1200	mm		
Length	D	1200	mm		
Length	L	14000	mm		
Aspect Ratio	l/b	11.67			*OK*
Aspect Ratio	l/d	11.67			*OK*
Aspect Ratio	d/b	1.00			
1. Drag Force					
Drag Force Coefficient	C_d	0.6			
Aspect Ratio Factor	K_{ar}	0.761			*Table E3 & E4*
Angle of Inclination Factor	K_i	1			
aerodynamic shape factor	$C_{fig,e}$	0.4566			
Wind Wall Pressure	P	**0.03**	**kPa**		
Forces	F	0.034	**kN/m**		
WIND DIRECTION 2 (Perpendicular to D)					
External Pressure					
2. Drag Force					
Drag Force Coefficient	C_d	0.6			
Aspect Ratio Factor	K_{ar}	0.761			*Table E3 & E4*
Angle of Inclination Factor	K_i	1			
aerodynamic shape factor	$C_{fig,e}$	0.4566			
Aspect Ratio	d/b	1.00			
Wind Wall Pressure	P	**0.03**	**kPa**		
Forces	F	0.034	**kN/m**		

3.2 Wind Load Diagrams

3.2.1 Wind Load (W1)

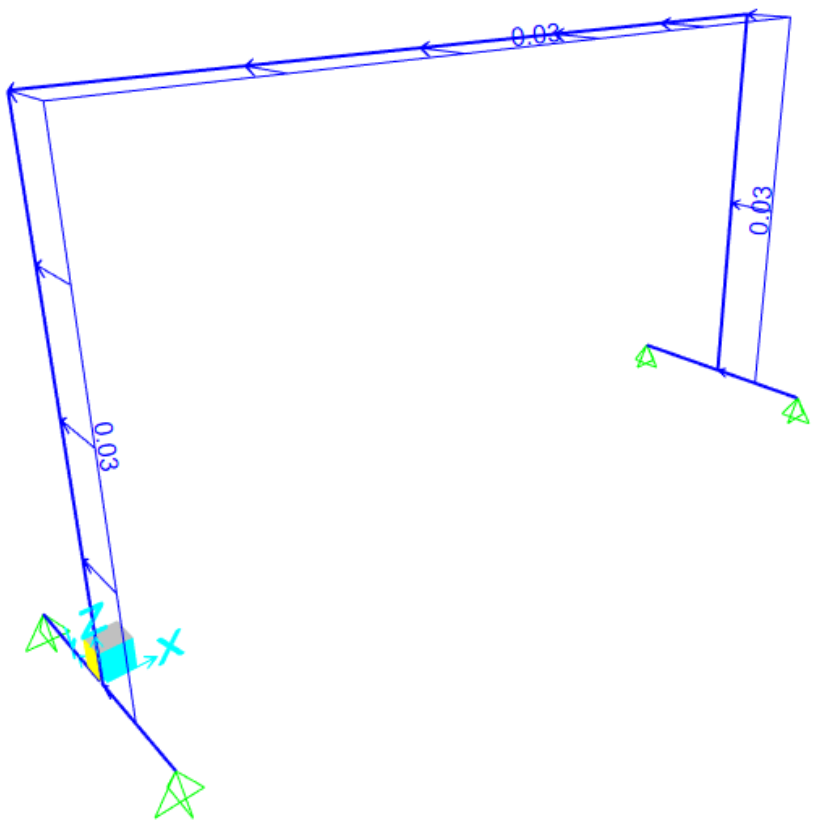

Figure 2 Wind Load(W1)

3.2.2 Wind Load (W2)

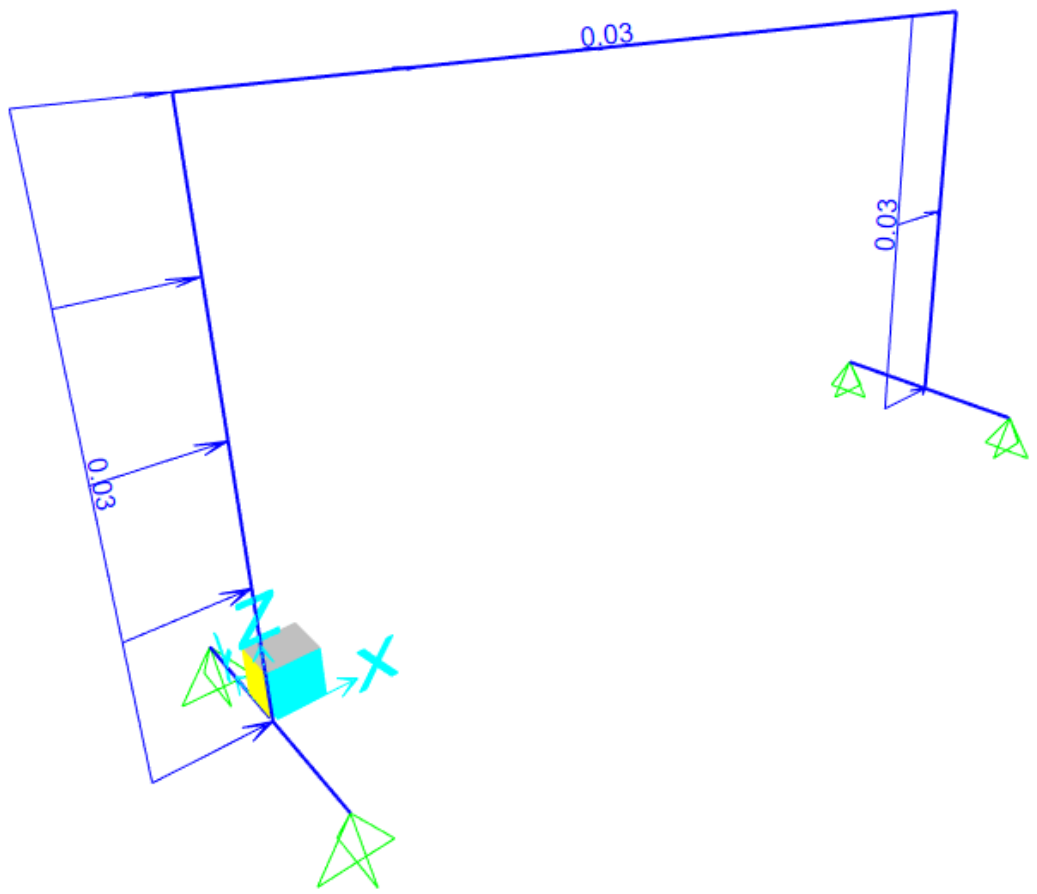

4 Analysis

4.1 Results

4.1.1 Maximum Axial Force

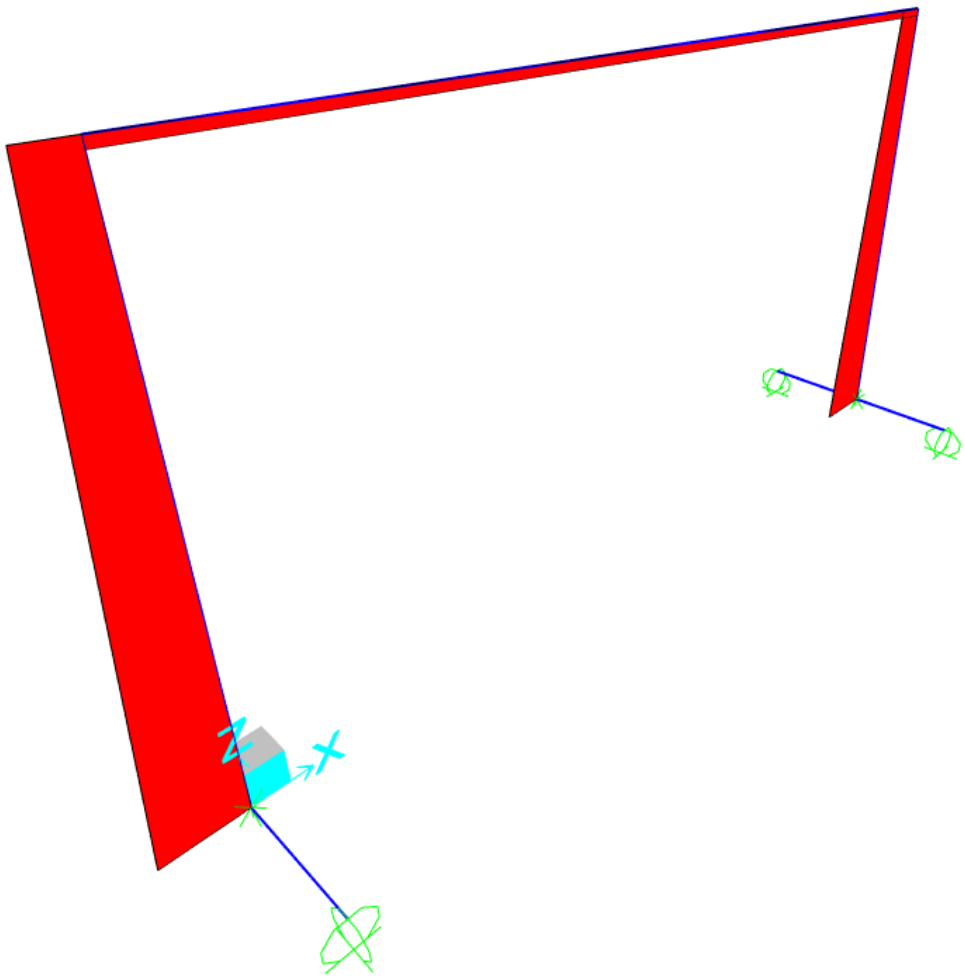

Figure 3 Maximum Axial Force

4.1.2 Maximum Reactions

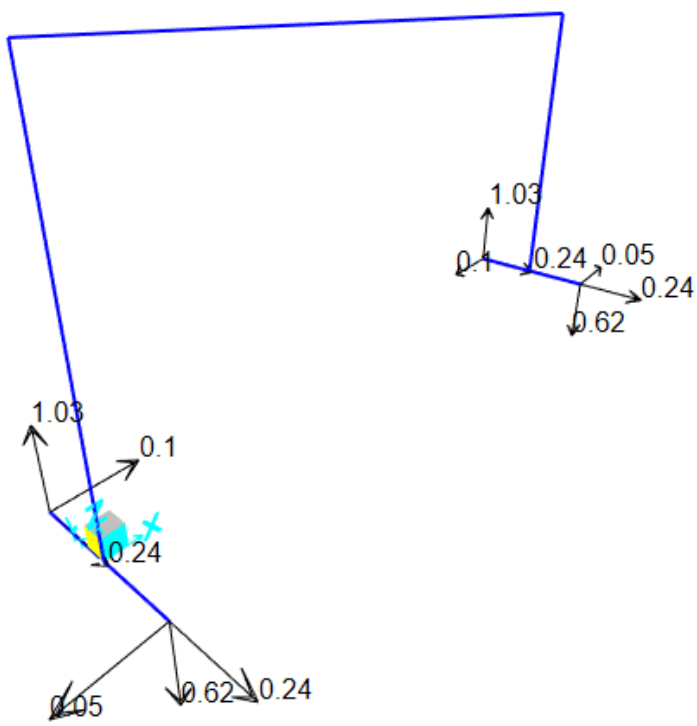

Figure 4 Maximum Reaction

$F_x = 0.1$ kN
$F_{z(up\ lift)} = 1.03$ kN
$F_{z\ (Bearing)} = 0.62$ kN

5 Ballast Requirements

Span	Dimensions Span x Height x Width	Wind Region	Wind Speed (km/hr)	Holding-down Weight per Leg (kg)
14m	14m x6.97m x3m	A	40.0	200
12m	12m x6.5m x2.5m	A	40.0	150
10m	10m x5.45m x2.8m	A	40.0	100
8m	8m x4.32m x2m	A	40.0	75
6m	6m x3.29m x1.8m	A	40.0	50
4m	4m x2.4m x 1.3m	A	40.0	25

6 Summary and Recommendations

- The structure is for temporary use only.
- To resist against uplift due to **40km/hr** wind speed, ballast requirement as tabulated in Cl.7 is required.
- For high gust wind speed anticipated at the site of the structure, the inflated structures are to be deflated.

Yours faithfully,
Prime Consulting Engineers Pty. Ltd.
Kevin Zia, MEng, MIEAust, CPEng, NER, APEC, IntPE (Aus), RPEQ

7 Appendix A - Technical Data

EXTREME MARQUEES

ARCH INFLATABLES

4m / 6m / 8m / 10m / 12m / 14m

PROMOTIONAL PRODUCT

ITEM	SPECIFICATION					
Size	4m	6m	8m	10m	12m	14m
Clearance	1.8m	2.7m	3.68m	4.55m	5.54m	5.7m
Weight	23kg	29kg	40kg	56kg	77kg	91kg
Internal Width	3.2m	4.8m	6.72m	8.2m	10m	12m
Frame Profile	40cm	60cm	64cm	90cm	92cm	120cm
Frame Fabric	0.95mm PVC					
Printing	Full Colour Digital Printing / UV Printing					
Features	Over Pressure Relief Valve System					
Package includes	Steel Pins, PVC Carry Bag, Repair Kit & Electric Pump					
Warranty	2 years					

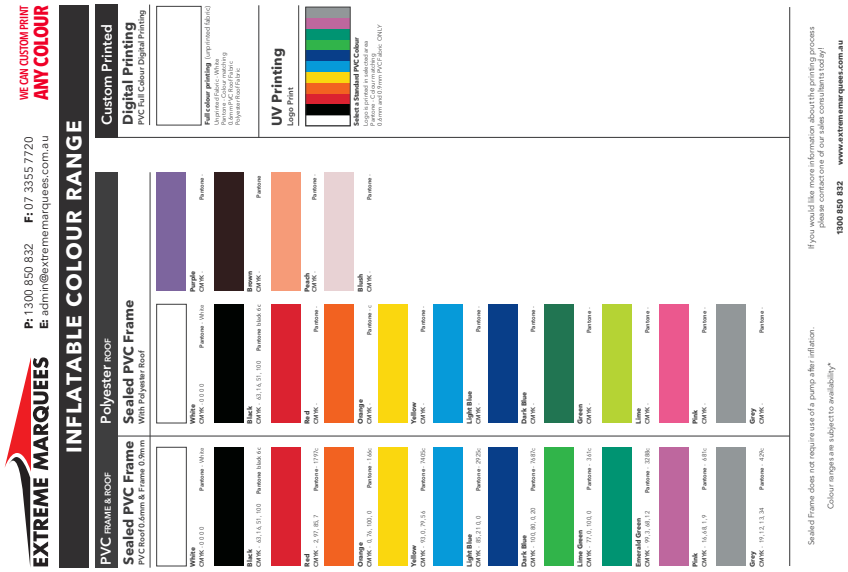

ADDITIONAL INFORMATION

Inflatable arches are a simple yet eye-catching product with a number of practical applications. Perfect for start and finish lines in sporting events and raceways, grand entrance ways to a spectacular outdoor event or function, or just as a huge branded billboard to stand over your event. We have a range of inflatable arch designs, including the square inflatable arch providing a neat and structured frame for your entranceway or finish line, which come in a range of sizes from 6 metres all the way to massive 12 metre structures.

Available with or without feet the entire inflatable arch range can also be custom printed to make a unique statement wherever it stands and perfectly represent your message or business. We've previously provided custom inflatable arches for a range of different events including charity groups and fun run and motorbike races and our clients are always amazed with the results.

TECHNICAL DIAGRAMS

STYLE
Square

STYLE
Chamfer

STYLE
Ranch

STYLE
Custom

EXTREME MARQUEES

4m INFLATABLE ARCH CHAMFER

Zoom in to view your artwork (Ctrl+equal sign)

PMS COLOUR MATCHING

PMS	PMS	PMS	PMS

All printing is done using CMYK on a large format printer.

Pantone Colours / PMS can be supplied they will be converted to a CMYK breakdown for digital printing.

Please state to our Graphics Coordinator if you require colour matching to either a PMS colour or a physical sample.

While we make every effort to match PMS colours, slight variation in colour will occur.

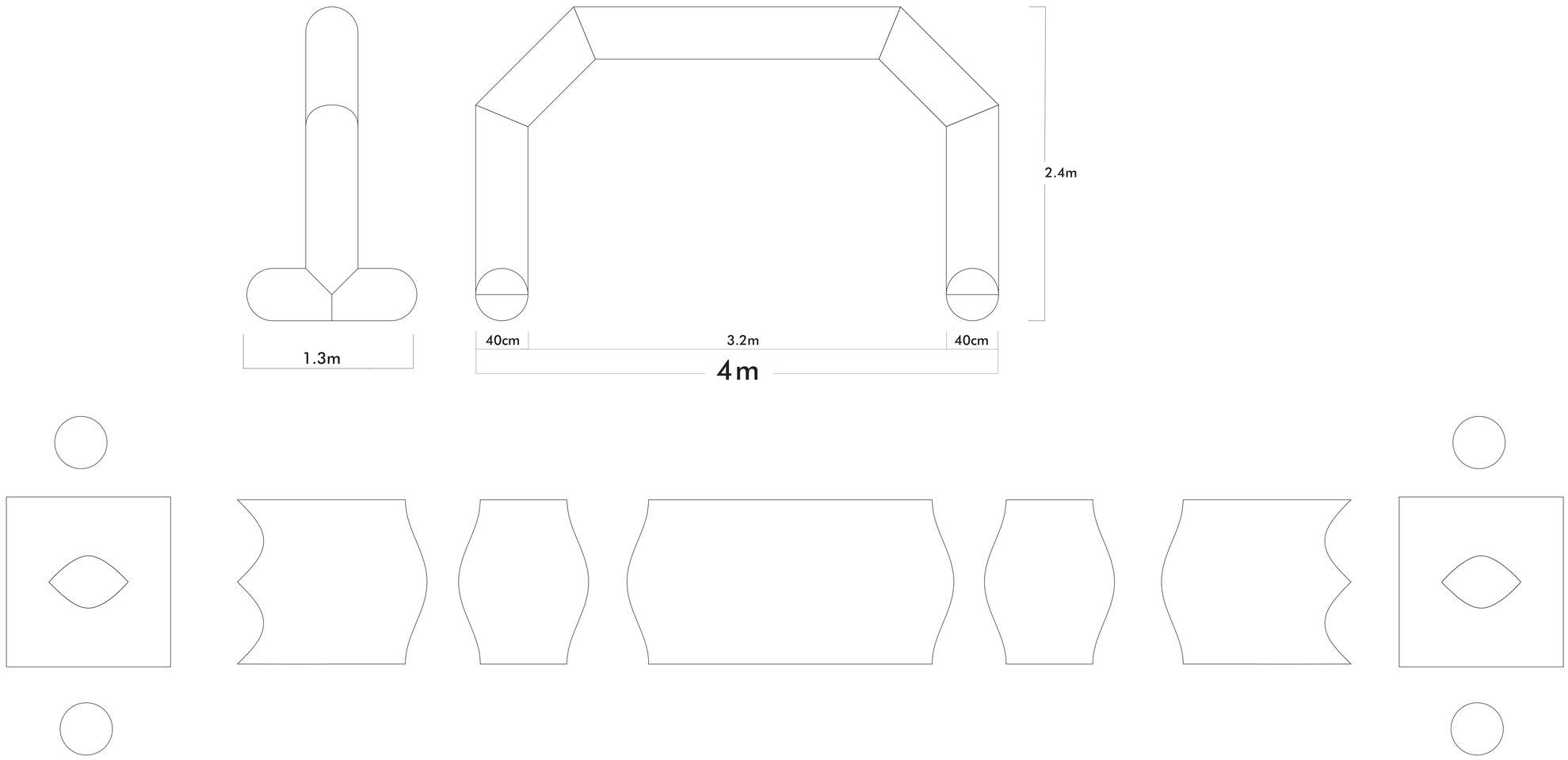

Please Note:
All artwork is printed in CMYK, please convert all PMS or RGB artwork to equivalent CMYK colour break downs. Please be aware that slight colour variation may occur in the printing process as colours displayed on a monitor can change when printed.
Place artwork in the Design Layer of this document.

This template is designed at a 10% scale of the final product. Rasterised artwork supplied at 300dpi to suit this template size is the minimum requirement for a high quality final print.

Copyright Extreme Marquees 2013

Zoom in to view your artwork (Ctrl+equal sign)

EXTREME MARQUEES

6m INFLATABLE ARCH CHAMFER

Zoom in to view your artwork (Ctrl+equal sign)

PMS COLOUR MATCHING

PMS	PMS	PMS	PMS

All printing is done using CMYK on a large format printer.

Pantone Colours / PMS can be supplied they will be converted to a CMYK breakdown for digital printing.

Please state to our Graphics Coordinator if you require colour matching to either a PMS colour or a physical sample.

While we make every effort to match PMS colours, slight variation in colour will occur.

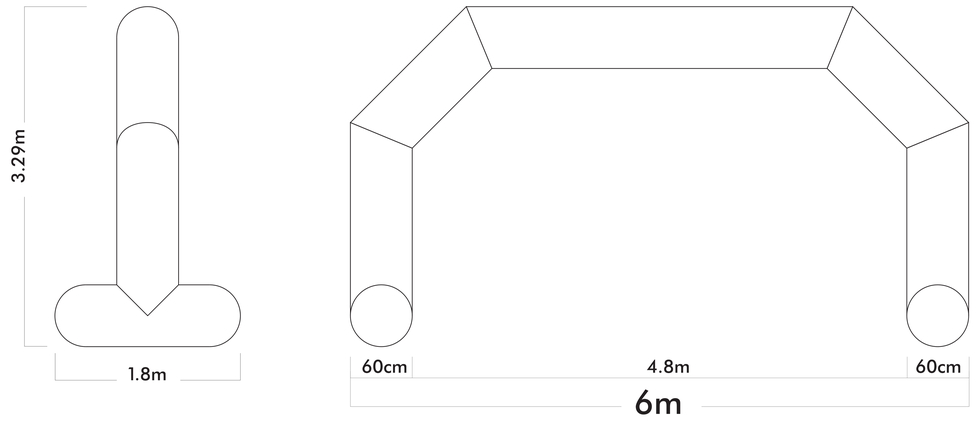

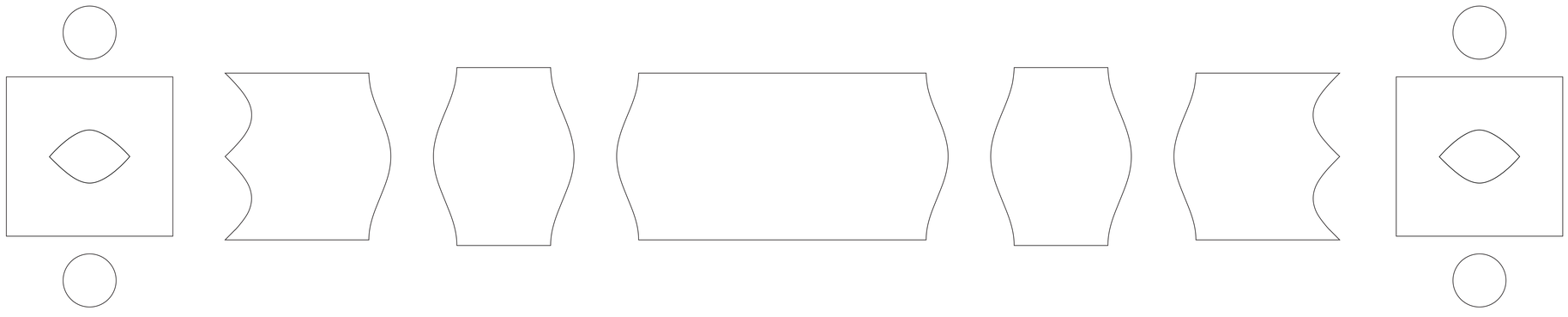

Please Note:
All artwork is printed in CMYK, please convert all PMS or RGB artwork to equivalent CMYK colour break downs. Please be aware that slight colour variation may occur in the printing process as colours displayed on a monitor can change when printed.
Place artwork in the Design Layer of this document.

This template is designed at a 10% scale of the final product. Rasterised artwork supplied at 300dpi to suit this template size is the minimum requirement for a high quality final print.

Copyright Extreme Marquees 2013

Zoom in to view your artwork (Ctrl+equal sign)

EXTREME MARQUEES

8m INFLATABLE ARCH CHAMFER

Zoom in to view your artwork (Ctrl+equal sign)

PMS COLOUR MATCHING

PMS	PMS	PMS	PMS

All printing is done using CMYK on a large format printer.

Pantone Colours / PMS can be supplied they will be converted to a CMYK breakdown for digital printing.

Please state to our Graphics Coordinator if you require colour matching to either a PMS colour or a physical sample.

While we make every effort to match PMS colours, slight variation in colour will occur.

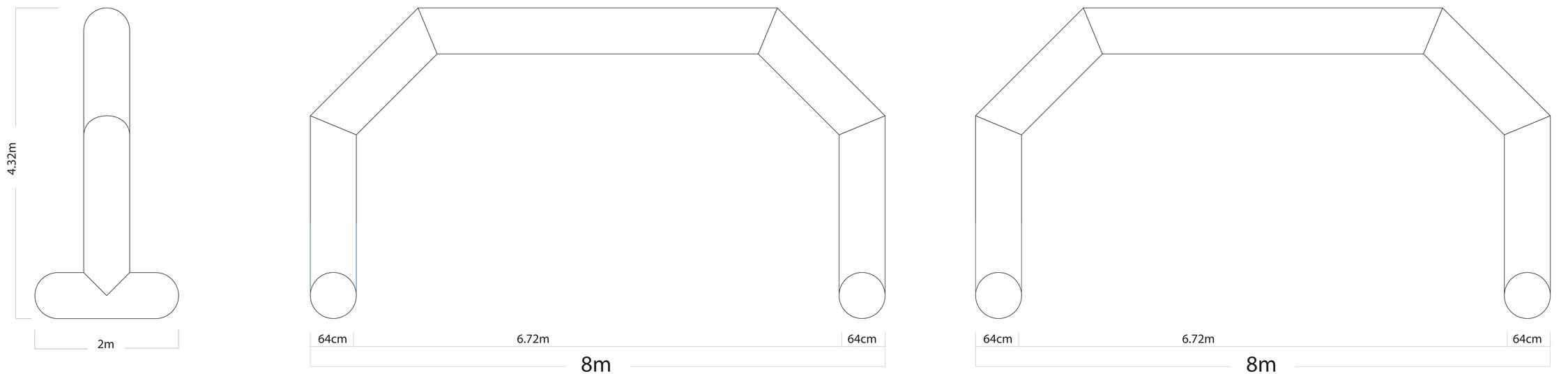

FRONT

BACK

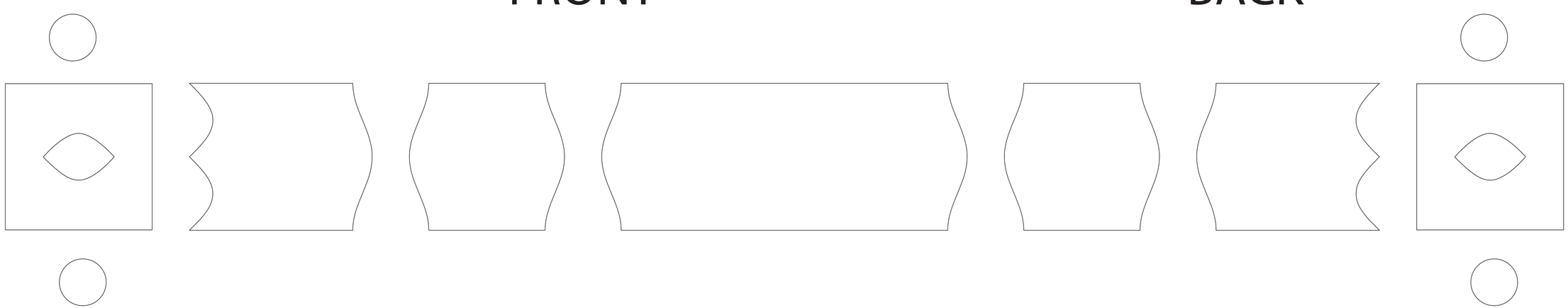

Please Note:
All artwork is printed in CMYK, please convert all PMS or RGB artwork to equivalent CMYK colour break downs. Please be aware that slight colour variation may occur in the printing process as colours displayed on a monitor can change when printed.
Place artwork in the Design Layer of this document.

This template is designed at a 10% scale of the final product. Rasterised artwork supplied at 300dpi to suit this template size is the minimum requirement for a high quality final print.

Copyright Extreme Marquees 2013

Zoom in to view your artwork (Ctrl+equal sign)

EXTREME MARQUEES

10m INFLATABLE ARCH CHAMFER

Zoom in to view your artwork (Ctrl+equal sign)

PMS COLOUR MATCHING

PMS	PMS	PMS	PMS

All printing is done using CMYK on a large format printer.

Pantone Colours / PMS can be supplied they will be converted to a CMYK breakdown for digital printing.

Please state to our Graphics Coordinator if you require colour matching to either a PMS colour or a physical sample.

While we make every effort to match PMS colours, slight variation in colour will occur.

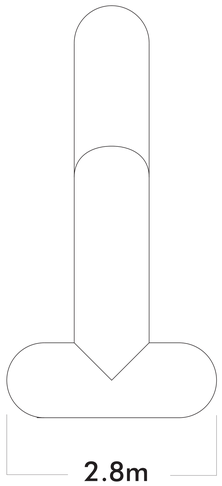

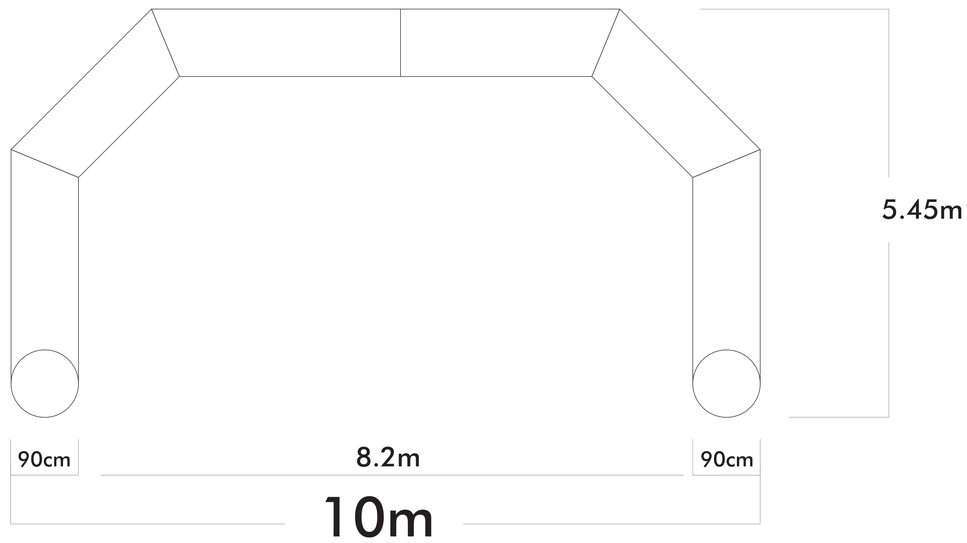

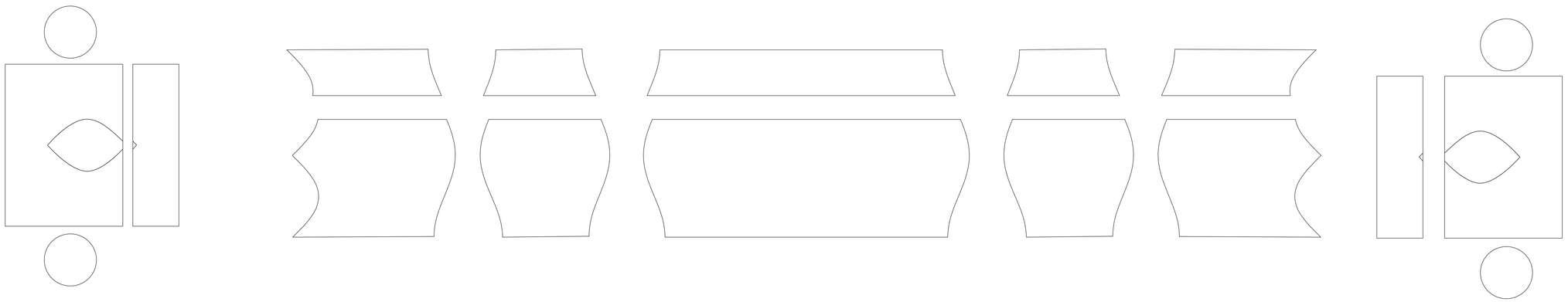

Please Note:
All artwork is printed in CMYK, please convert all PMS or RGB artwork to equivalent CMYK colour break downs. Please be aware that slight colour variation may occur in the printing process as colours displayed on a monitor can change when printed.
Place artwork in the Design Layer of this document.

This template is designed at a 10% scale of the final product.
Rasterised artwork supplied at 300dpi to suit this template size is the minimum requirement for a high quality final print.

Copyright Extreme Marquees 2013

Zoom in to view your artwork (Ctrl+equal sign)

EXTREME MARQUEES

12m INFLATABLE ARCH CHAMFER

Zoom in to view your artwork (Ctrl+equal sign)

PMS COLOUR MATCHING

PMS	PMS	PMS	PMS

All printing is done using CMYK on a large format printer.

Pantone Colours / PMS can be supplied they will be converted to a CMYK breakdown for digital printing.

Please state to our Graphics Coordinator if you require colour matching to either a PMS colour or a physical sample.

While we make every effort to match PMS colours, slight variation in colour will occur.

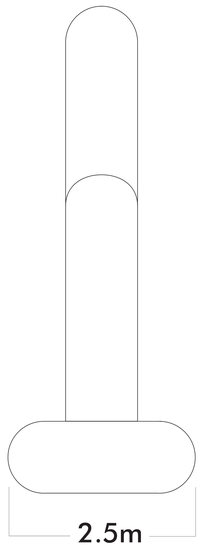

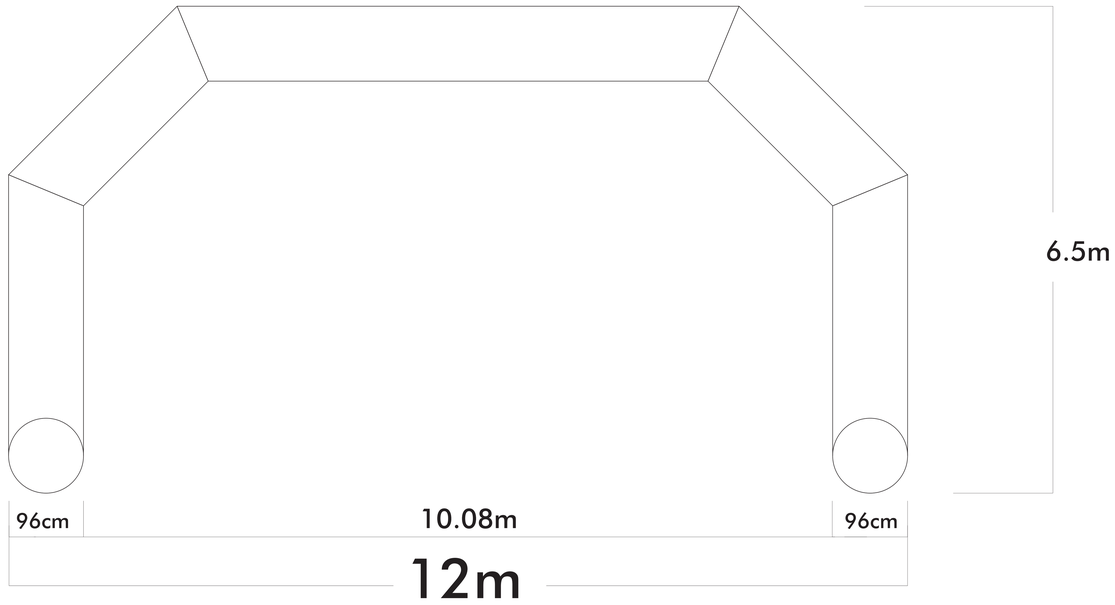

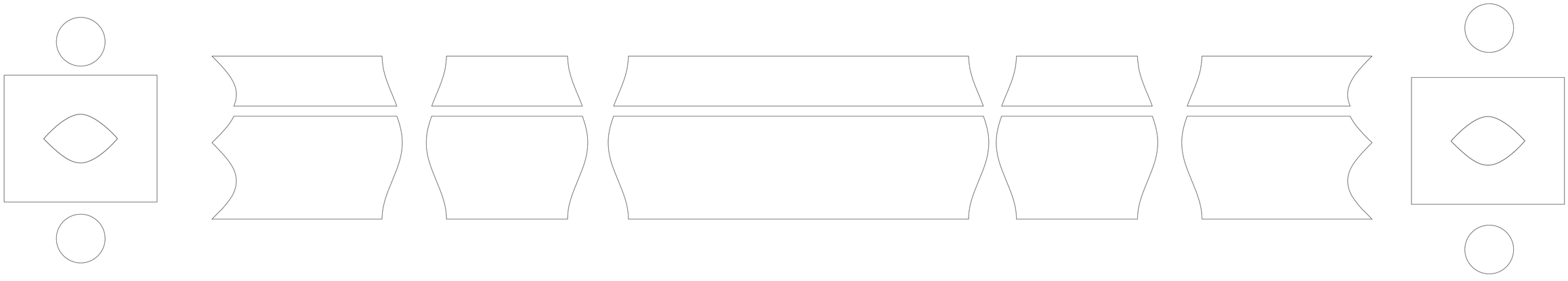

Please Note:
All artwork is printed in CMYK, please convert all PMS or RGB artwork to equivalent CMYK colour break downs. Please be aware that slight colour variation may occur in the printing process as colours displayed on a monitor can change when printed.
Place artwork in the Design Layer of this document.

This template is designed at a 10% scale of the final product. Rasterised artwork supplied at 300dpi to suit this template size is the minimum requirement for a high quality final print.

Copyright Extreme Marquees 2013

Zoom in to view your artwork (Ctrl+equal sign)

EXTREME MARQUEES

14m INFLATABLE ARCH CHAMFER

Zoom in to view your artwork (Ctrl+equal sign)

PMS COLOUR MATCHING

PMS	PMS	PMS	PMS

All printing is done using CMYK on a large format printer.

Pantone Colours / PMS can be supplied they will be converted to a CMYK breakdown for digital printing.

Please state to our Graphics Coordinator if you require colour matching to either a PMS colour or a physical sample.

While we make every effort to match PMS colours, slight variation in colour will occur.

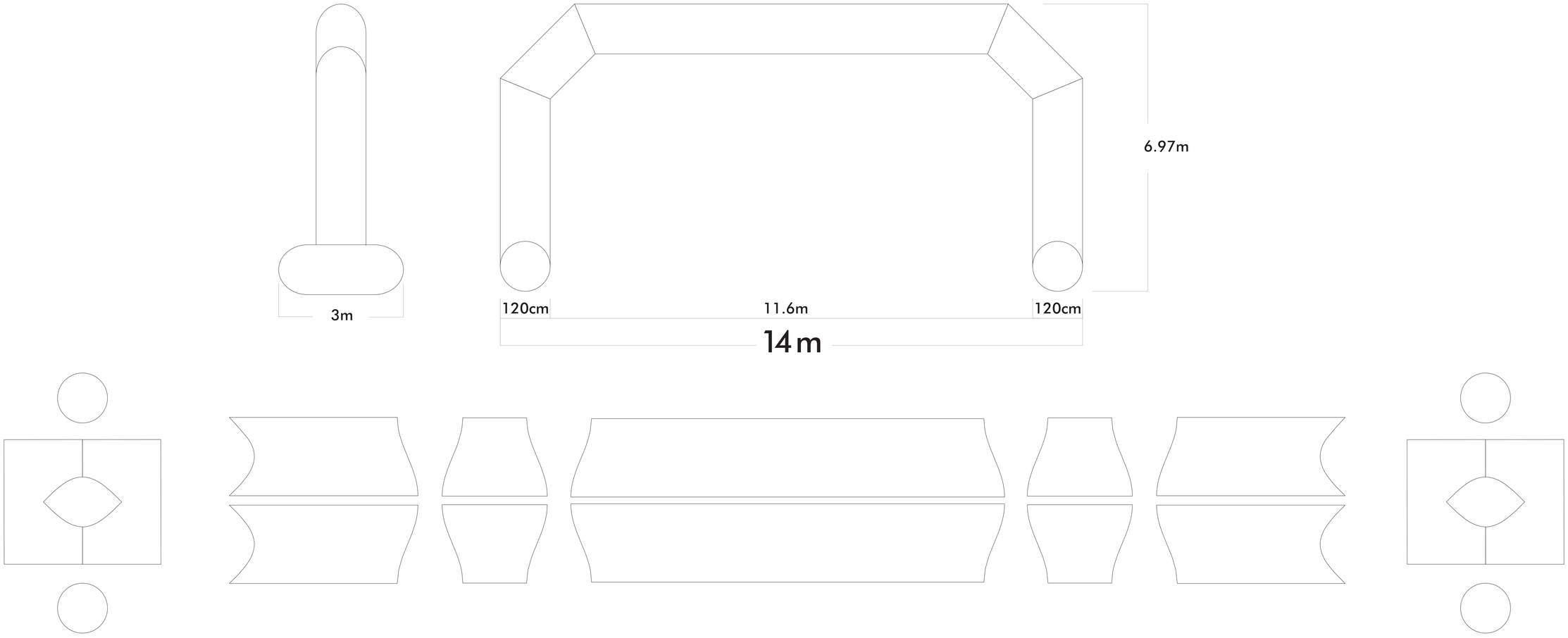

Please Note:
All artwork is printed in CMYK, please convert all PMS or RGB artwork to equivalent CMYK colour break downs. Please be aware that slight colour variation may occur in the printing process as colours displayed on a monitor can change when printed.
Place artwork in the Design Layer of this document.

This template is designed at a 10% scale of the final product.
Rasterised artwork supplied at 300dpi to suit this template size is the minimum requirement for a high quality final print.

Copyright Extreme Marquees 2013

Zoom in to view your artwork (Ctrl+equal sign)